Flavor Burst™

MIS 3170 FB Menu Panel Kit

Assembly and Installation

The Menu Panel Kit attaches to the Flavor Burst systems to display the variety of flavors available. The durable flavor labels included with the kit are easily interchangeable. The Menu Panel assembly can be mounted directly to the freezer Ⓐ, installed above the keypad Ⓑ or to the right of the keypad Ⓒ. Determine which assembly and installation method is best for your current operation. For more information, contact your local distributor.

CW 147-A
Menu Panel

MIS 3076
Adhesive Strip

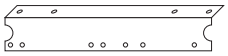

CW 146A
Mounting Bracket

FAS 2024

FAS 2014

FAS 2032
Nylon Spacers

MIS 3170-L
Flavor Labels

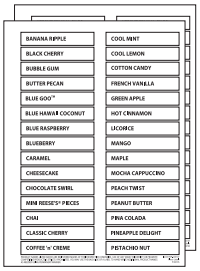

BANANA RIPPLE	COOL MINT
BLACK CHERRY	COOL LEMON
BUBBLE GUM	COTTON CANDY
BUTTER PECAN	FRENCH VANILLA
BLUE GOO™	GREEN APPLE
BLUE HAWAII COCONUT	HOT CINNAMON
BLUE RASPBERRY	LICORICE
BLUEBERRY	MANGO
CARAMEL	MAPLE
CHEESECAKE	MOCHA CAPPUCCINO
CHOCOLATE SWIRL	PEACH TWIST
MINI REESE'S® PIECES	PEANUT BUTTER
CHAI	PINA COLADA
CLASSIC CHERRY	PINEAPPLE DELIGHT
COFFEE 'n' CREME	PISTACHIO NUT

Ⓐ MOUNTING DIRECT TO FREEZER

1 Determine the general area to mount the menu panel on the freezer. Ensure the surface is flat, does not contain panel seams and is along the freezer's right edge. Clean, rinse and dry this area with detergent, water and single service towels.

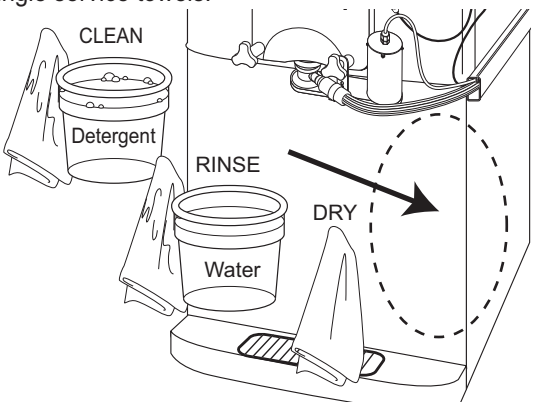

2 Place the menu panel where it will be mounted so that the right edge of the menu panel hanges over the freezer edge by 1/2". Use a soft lead pencil to mark around the menu on the freezer.

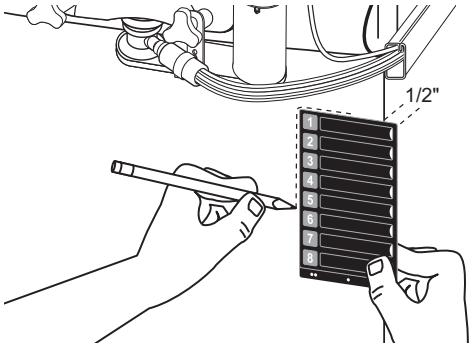

NOTE: THE MENU PANEL'S RIGHT EDGE MUST HAVE 1/2" CLEARANCE FROM THE FREEZER TO ACCESS THE LABEL SLOTS.

3 Remove the protective backing from one side of the adhesive and apply it to the back of the menu panel, at least 1/2" from the slotted edge.

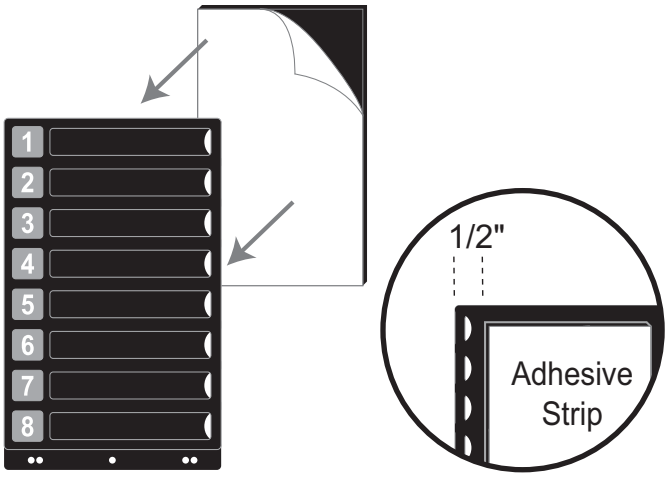

4 Remove the protective backing from the adhesive and press the menu panel assembly within the marks on the freezer. Proceed to the final step on page 2 "Installing the Flavor Labels."

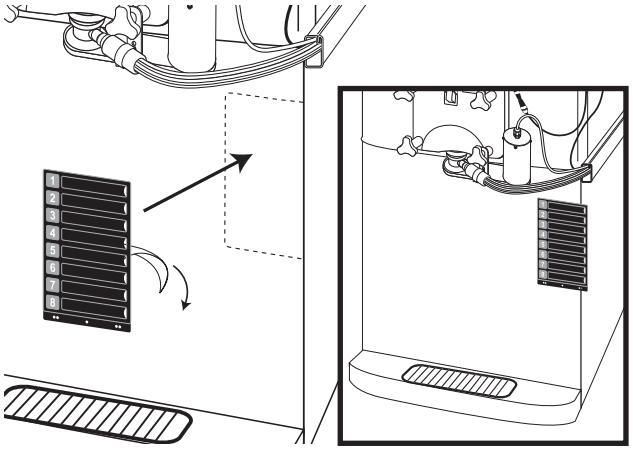

B INSTALLING ABOVE THE KEYPAD

1. Remove the screws from the upper keypad bracket.

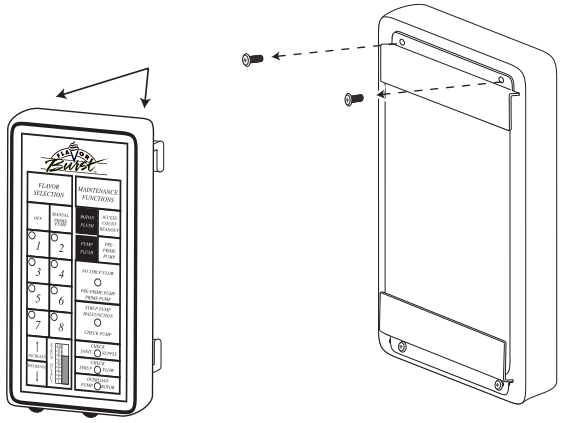

2. Attach the menu panel to the back of the keypad bracket using the nylon spacers and the FAS 2014 screws provided. Ensure the nylon spacers are installed between the menu panel and the keypad bracket, and tighten the screws. Proceed to the final step "Installing the Flavor Labels."

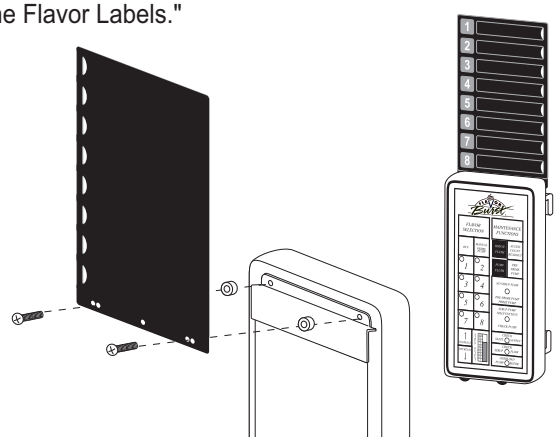

C INSTALLING TO THE RIGHT OF THE KEYPAD

1. Line up the first and third menu panel holes with the far right holes of the bracket. Attach the menu panel to the bracket using two FAS 2024 screws.

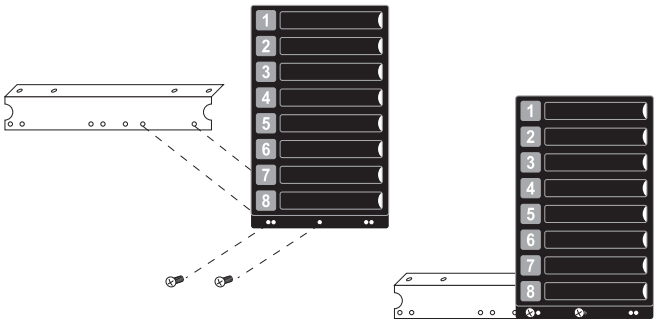

2. Remove the screws from the lower keypad bracket.

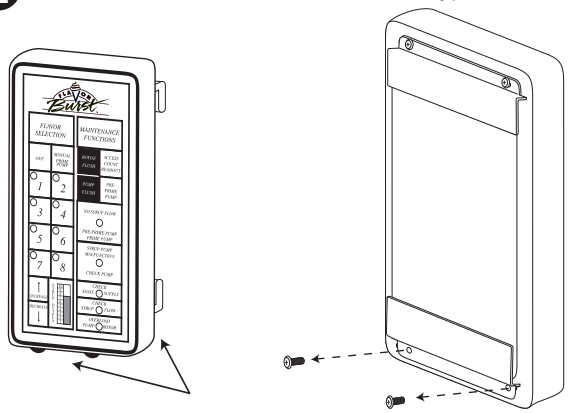

3. Attach the menu bracket to the back of the keypad bracket using the nylon spacers and the FAS 2014 screws provided. Ensure the nylon spacers are installed between the two brackets, and tighten the screws. Proceed to the final step "Installing the Flavor Labels."

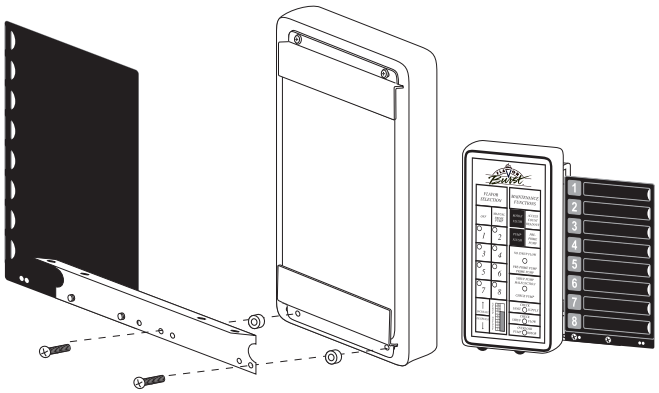

INSTALLING THE FLAVOR LABELS

Insert flavor lavels into the menu panel slots to complete the assembly and installation.

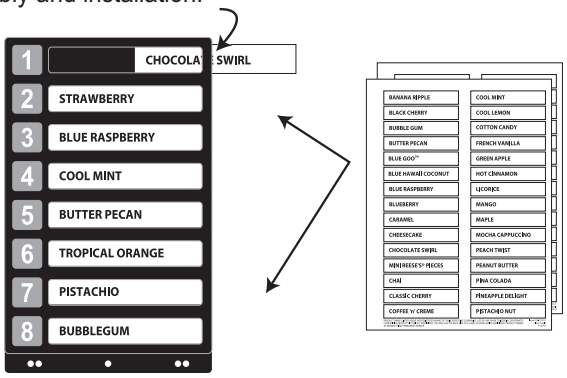

ENSURE THE FLAVOR LABEL IN THE NUMBERED SLOT CORRESPONDS WITH THE FLAVOR IN THE CABINET TRAY OF THE SAME NUMBER.

© 2006 Flavor Burst Co. Flavor Burst is a registered trademark of the Flavor Burst Company. All other marks are property of their respective owners. All Rights Reserved.