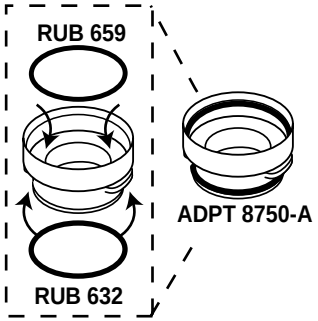

ADPT 8750-A

TAYLOR® CROWN SERIES ADAPTER

THE ADPT 8750-A ADAPTER IS DESIGNED FOR USE WITH TAYLOR CROWN SERIES FREEZER MODELS. THE ADPT 8750-A REQUIRES THE UPPER O-RING RUB 659 AND THE LOWER O-RING RUB 632. ALWAYS KEEP SPARES OF THESE PARTS IN THE SPARE PARTS KIT AS REPLACEMENTS FOR WORN PARTS.

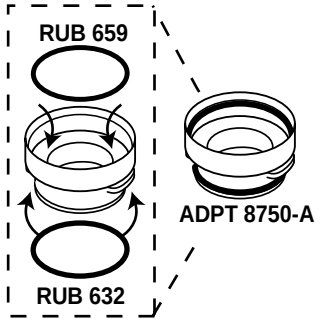

ADPT 8750-A

TAYLOR® CROWN SERIES ADAPTER

THE ADPT 8750-A ADAPTER IS DESIGNED FOR USE WITH TAYLOR CROWN SERIES FREEZER MODELS. THE ADPT 8750-A REQUIRES THE UPPER O-RING RUB 659 AND THE LOWER O-RING RUB 632. ALWAYS KEEP SPARES OF THESE PARTS IN THE SPARE PARTS KIT AS REPLACEMENTS FOR WORN PARTS.

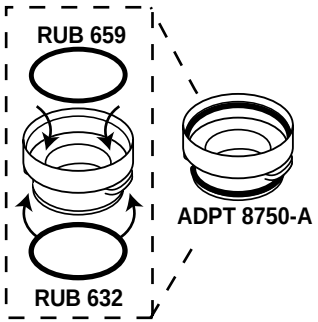

ADPT 8750-A

TAYLOR® CROWN SERIES ADAPTER

THE ADPT 8750-A ADAPTER IS DESIGNED FOR USE WITH TAYLOR CROWN SERIES FREEZER MODELS. THE ADPT 8750-A REQUIRES THE UPPER O-RING RUB 659 AND THE LOWER O-RING RUB 632. ALWAYS KEEP SPARES OF THESE PARTS IN THE SPARE PARTS KIT AS REPLACEMENTS FOR WORN PARTS.

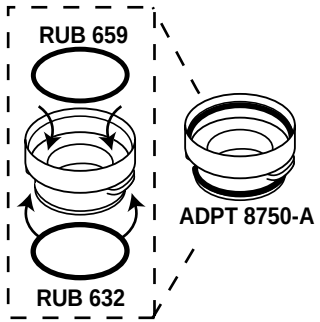

ADPT 8750-A

TAYLOR® CROWN SERIES ADAPTER

THE ADPT 8750-A ADAPTER IS DESIGNED FOR USE WITH TAYLOR CROWN SERIES FREEZER MODELS. THE ADPT 8750-A REQUIRES THE UPPER O-RING RUB 659 AND THE LOWER O-RING RUB 632. ALWAYS KEEP SPARES OF THESE PARTS IN THE SPARE PARTS KIT AS REPLACEMENTS FOR WORN PARTS.

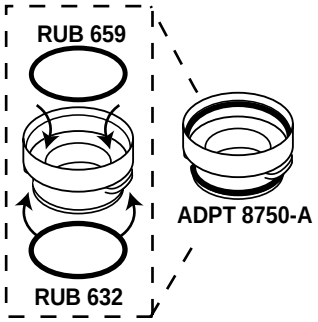

ADPT 8750-A

TAYLOR® CROWN SERIES ADAPTER

THE ADPT 8750-A ADAPTER IS DESIGNED FOR USE WITH TAYLOR CROWN SERIES FREEZER MODELS. THE ADPT 8750-A REQUIRES THE UPPER O-RING RUB 659 AND THE LOWER O-RING RUB 632. ALWAYS KEEP SPARES OF THESE PARTS IN THE SPARE PARTS KIT AS REPLACEMENTS FOR WORN PARTS.

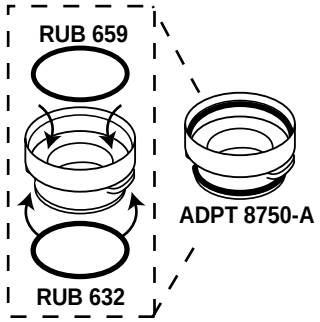

ADPT 8750-A

TAYLOR® CROWN SERIES ADAPTER

THE ADPT 8750-A ADAPTER IS DESIGNED FOR USE WITH TAYLOR CROWN SERIES FREEZER MODELS. THE ADPT 8750-A REQUIRES THE UPPER O-RING RUB 659 AND THE LOWER O-RING RUB 632. ALWAYS KEEP SPARES OF THESE PARTS IN THE SPARE PARTS KIT AS REPLACEMENTS FOR WORN PARTS.

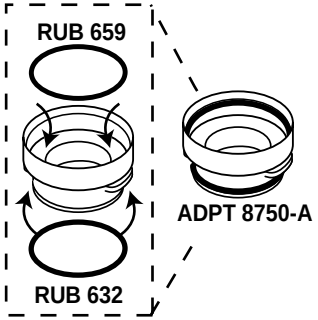

ADPT 8750-A

TAYLOR® CROWN SERIES ADAPTER

THE ADPT 8750-A ADAPTER IS DESIGNED FOR USE WITH TAYLOR CROWN SERIES FREEZER MODELS. THE ADPT 8750-A REQUIRES THE UPPER O-RING RUB 659 AND THE LOWER O-RING RUB 632. ALWAYS KEEP SPARES OF THESE PARTS IN THE SPARE PARTS KIT AS REPLACEMENTS FOR WORN PARTS.

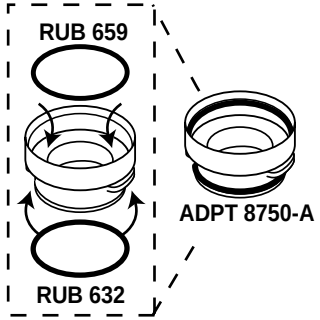

ADPT 8750-A

TAYLOR® CROWN SERIES ADAPTER

THE ADPT 8750-A ADAPTER IS DESIGNED FOR USE WITH TAYLOR CROWN SERIES FREEZER MODELS. THE ADPT 8750-A REQUIRES THE UPPER O-RING RUB 659 AND THE LOWER O-RING RUB 632. ALWAYS KEEP SPARES OF THESE PARTS IN THE SPARE PARTS KIT AS REPLACEMENTS FOR WORN PARTS.